LISN-MATE

1 Introduction

The TBLM2 is is a Common Mode / Differential Mode - separator companion device for LISN. The LISN Mate is connected to the output of a LISN inserted into the positive supply line and to a second LISN inserted into the negative supply line. The conducted noise signal at the output of a LISN is the sum of common mode and differential mode noise. The LISN mate separates it into the common mode and differential mode components, with each signal component available at a separate BNC port. The TBLM2 can be used in the frequency range from 9 kHz to 110 MHz.

Picture 1: LISN MATE

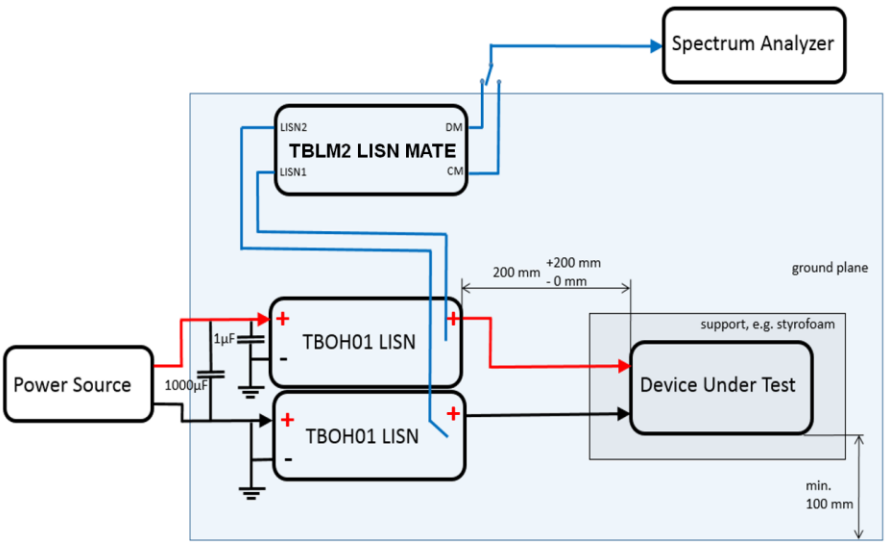

Picture 2: set up for the measurement of differential mode and common mode conducted noise; terminate the unused LISN mate output port with 50 Ohm

2 Parameters

Nominal frequency range: 150 kHz – 100 MHz

Usable frequency range: 9kHz – 110 MHz

Port impedance

| Z_{LISN1} |, | Z_{LISN2} |, | Z_{CM} |: 150 kHz – 1 MHz: 30…55 Ohm

1 MHz -30 MHz: 50….60 Ohm

30 MHz – 100 MHz: 50….70 Ohm

| Z_{DM} |: 150 kHz – 1 MHz: 30…50 Ohm

1 MHz -30 MHz: 40….50 Ohm

30 MHz – 100 MHz: 40….70 Ohm

| Z_{LISN1} |: independent of the termination at the LISN2 port

| Z_{LISN2} |: independent of the termination at the LISN1 port

| $Z_{CM\ LISN1\text{-}LISN2}$ |: 25 Ohm nominal

| $Z_{DM\ LISN1\text{-}LISN2}$ |: 100 Ohm nominal

Maximum RF level at any BNC port: 27dBm

Maximum DC current at any BNC port: 30 mA

2.1 Impedance plot

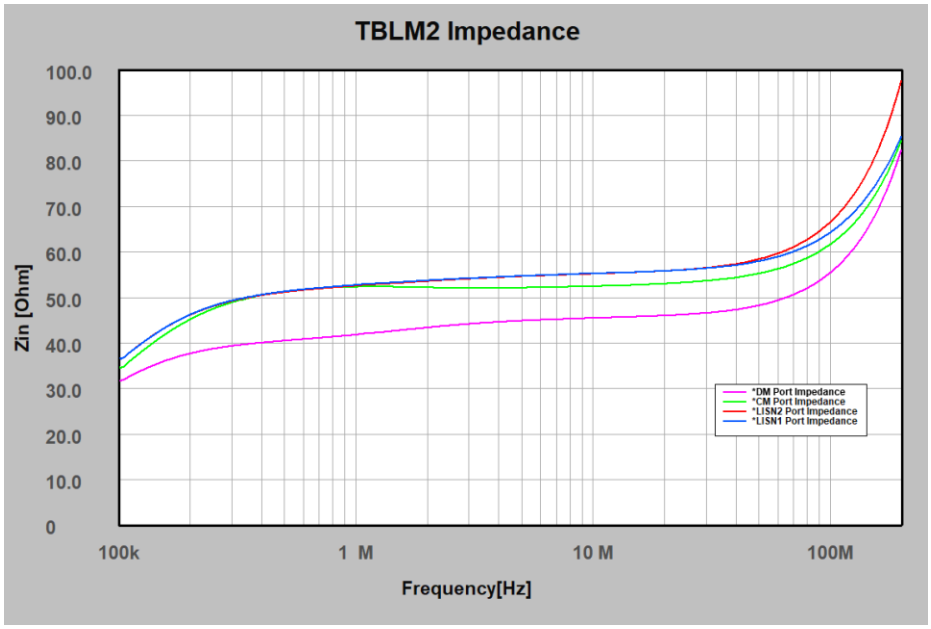

Picture 3: LISN MATE Port Impedances, 100 kHz – 200 MHz

LISN-MATE

2.2 Frequency response

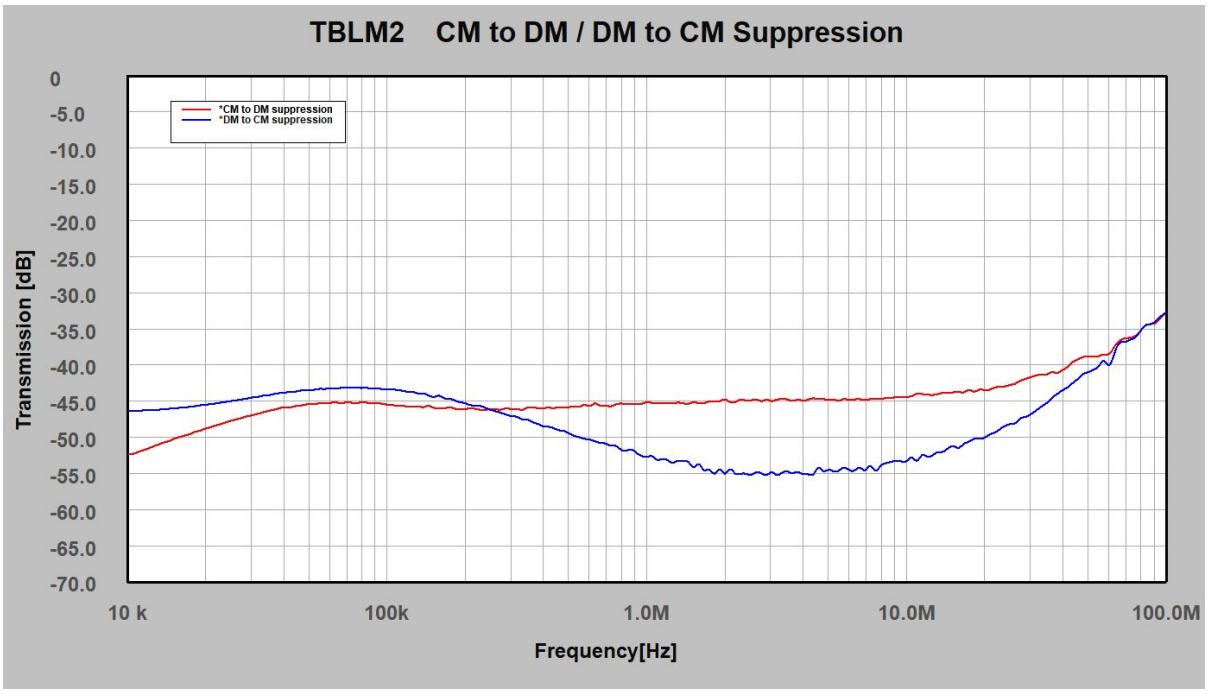

Picture 3: LISN MATE DM/CM - suppression

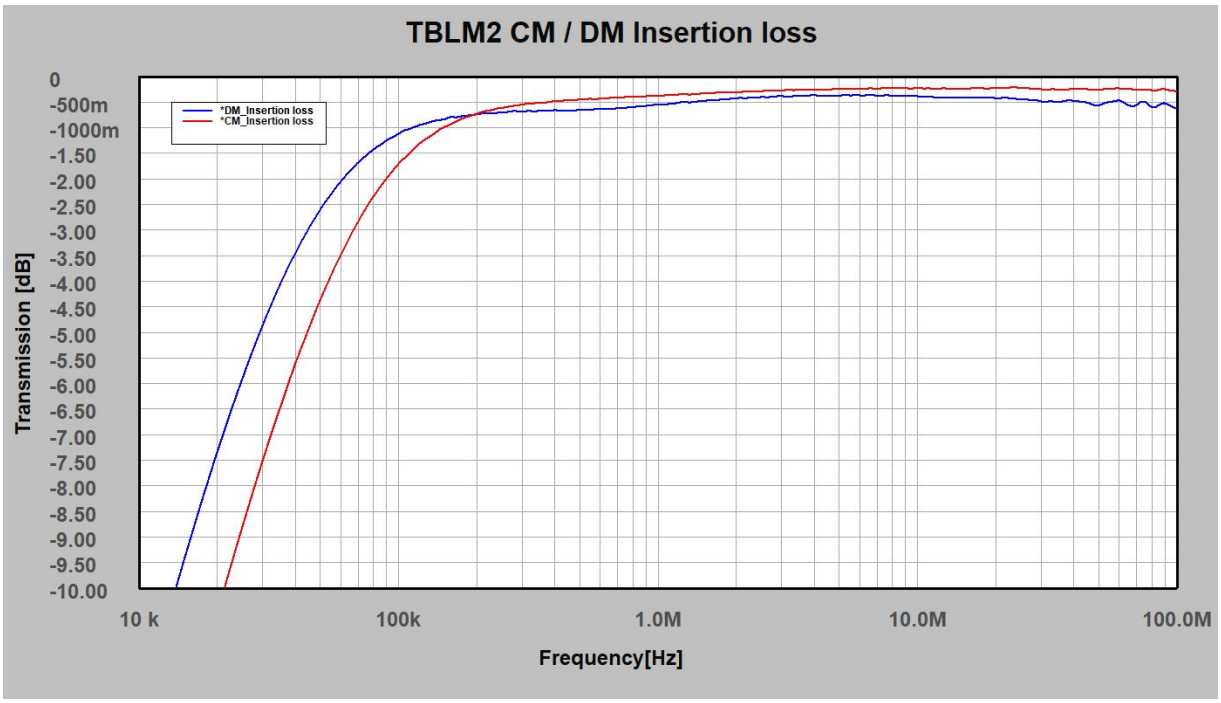

Picture 4: DM/CM insertion loss

LISN-MATE

Common mode insertion loss: input signal split into two same phase components and applied to LISN1 and LISN2 port; output signal measured at common mode port.

Differential mode insertion loss: input signal split into two 180° phase shift components and applied to LISN1 and LISN2 port; output signal measured at differential mode port.

Differential mode suppression at CM output: input signal split into two 180° phase shift components and applied to LISN1 and LISN2 port; output signal measured at common mode port.

Common mode suppression at DM output: input signal split into two same phase components and applied to LISN1 and LISN2 port; output signal measured at differential mode port.

Frequency [MHz]	DM insertion loss [dB]	CM insertion loss [dB]	DM supression [dB] at CM port	CM supression [dB] at DM port
0.009	-13,65	-16,94	-47,01	-53,78
0.01	-12,22	-15,78	-46,41	-52,34
0.025	-5,92	-8,81	-45,04	-47,78
0.05	-2,60	-4,37	-43,54	-45,46
0.075	-1,55	-2,58	-43,20	-45,32
0.1	-1,13	-1,72	-43,38	-45,53
0.15	-0,84	-1,00	-44,48	-45,92
0.25	-0,71	-0,62	-46,25	-46,18
0.5	-0,66	-0,46	-49,50	-45,92
0,75	-0,62	-0,41	-51,20	-45,61
1	-0,56	-0,38	-52,76	-45,22
5	-0,39	-0,25	-54,57	-44,89
10	-0,39	-0,23	-53,36	-44,47
20	-0,43	-0,24	-50,12	-43,54
30	-0,50	-0,25	-46,89	-41,75
40	-0,48	-0,24	-43,54	-40,75
50	-0,57	-0,27	-41,05	-38,86
60	-0,48	-0,24	-40,13	-38,57
70	-0,56	-0,26	-36,84	-36,36
80	-0,61	-0,27	-35,28	-35,24
90	-0,53	-0,26	-34,14	-34,33
100	-0,63	-0,29	-32,78	-32,82
110	-0,56	-0.31	-30,56	-30,63

Table 1 – Frequency Response

2.3 Conversion to absolute voltages

LISN mates are typically used to monitor filter modifications, where the absolute values of the CM and DM voltages are not required. There are also no CM or DM emission limits for 50 Ohm LISNs.

In order to obtain the absolute voltage amplitudes, correction factors have to be applied:

Below a setup, where the LISN inputs of the LISN mate are fed with two sinosodial signals with 10 MHz, 1Vpp and 180° phase shift with respect to each other. The output impedance of the signal generators is set to 50 Ohm and the oscilloscope inputs are terminated with 50 Ohm:

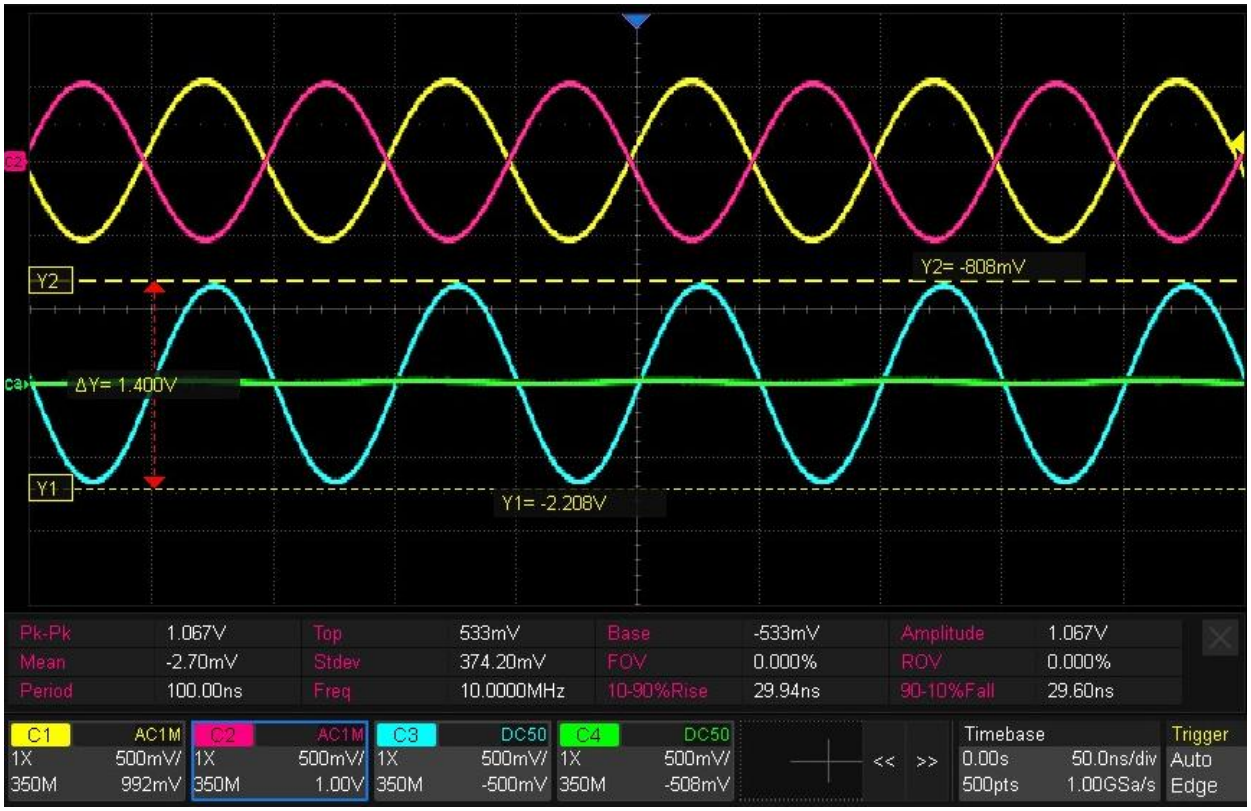

Picture 5: oscilloscope screenshot of a differential mode measurement

CH1 (yellow), CH2 (red): signals at the LISN inputs; 10 MHz, 1Vpp; 180° phase shift

CH3 (blue): LISN Mate DM output CH4 (green): LISN Mate CM output

The CM output amplitude at CH4 is close to zero as expected and the DM output amplitude at CH3 is 1.4Vpp.

According to the definition $V_{DM} = V_{LISN1} - V_{LISN2}$ the actual differential mode voltage of the setup is 2Vpp. Multiply the measured DM voltage with sqrt(2) = 1.4 to obtain the actual DM voltage: 1.4Vpp * 1.4 = 2Vpp.

When measuring the DM spectrum with an analyzer in dBµV, add 3 dB to obtain the absolute DM amplitude. In order to compensate for the frequency response of the LISN mate, add 3 dB to the values of the DM insertion loss in *Table 1*.

LISN-MATE

Below a setup, where the LISN inputs of the LISN mate are fed with two sinosodial signals with 10 MHz, 1Vpp and 0° phase shift with respect to each other. The output impedance of the signal generators is set to 50 Ohm and the oscilloscope inputs are terminated with 50 Ohm:

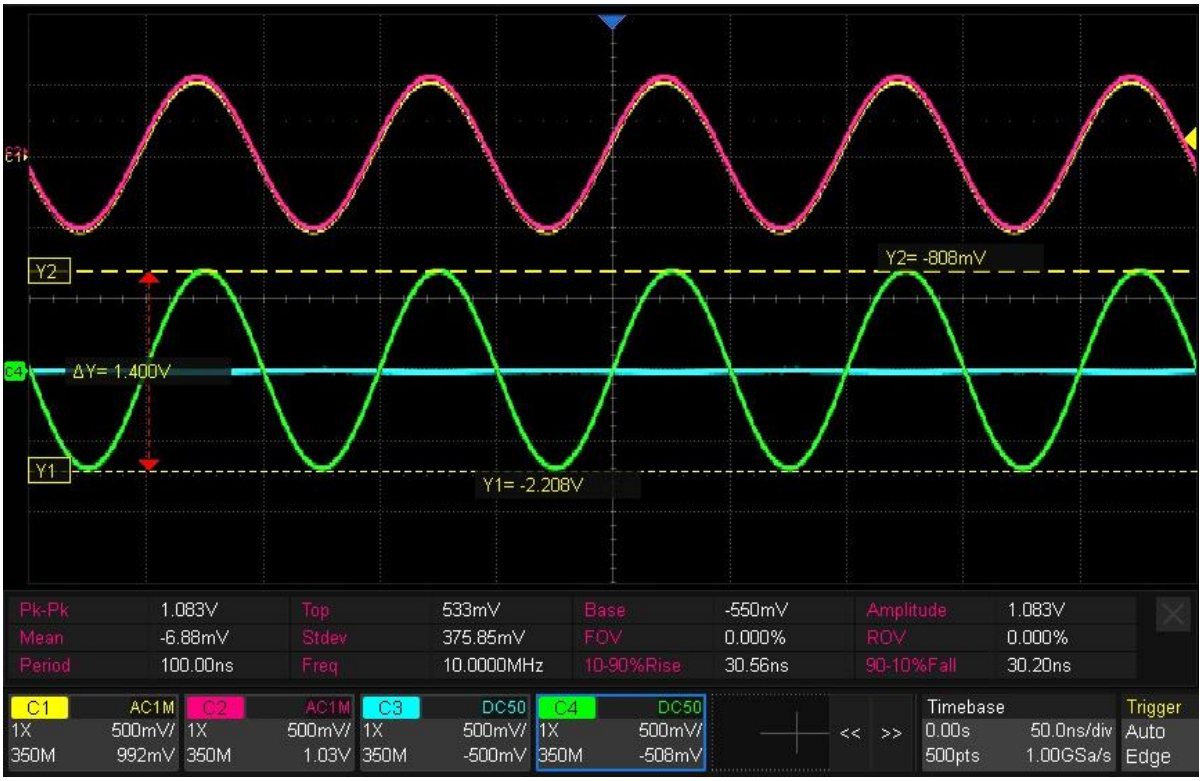

Picture 6: oscilloscope screenshot of a common mode measurement

CH1 (yellow), CH2 (red): signals at the LISN inputs; 10 MHz, 1Vpp; 0° phase shift

CH3 (blue): LISN Mate DM output CH4 (green): LISN Mate CM output

The DM output amplitude at CH4 is close to zero as expected and the CM output amplitude at CH3 is 1.4Vpp.

According to the definition $V_{CM} = (V_{LISN1} + V_{LISN2}) / 2$ the actual common mode voltage of the setup is 1Vpp. Multiply the measured CM voltage with 1/sqrt(2) = 0.7 to obtain the actual CM voltage: 1.4Vpp * 0.7 = 1Vpp.

When measuring the CM spectrum with an analyzer in dBµV, subtract 3 dB to obtain the absolute CM amplitude. In order to compensate for the frequency response of the LISN mate, subtract 3 dB from the values of the CM insertion loss in *Table 1*.

Frequency [MHz]	DM insertion loss [dB]	DM voltage correction factor [dB]	CM insertion loss [dB]	CM voltage correction factor [dB]
0.009	-13,65	-10,65	-16,94	-19,94
0.01	-12,22	-9,22	-15,78	-18,78
0.025	-5,92	-2,92	-8,81	-11,81

0.05	-2,60	0,4	-4,37	-7,37
0.075	-1,55	1,45	-2,58	-5,58
0.1	-1,13	1,87	-1,72	-4,72
0.15	-0,84	2,16	-1,00	-4
0.25	-0,71	2,29	-0,62	-3,62
0.5	-0,66	2,34	-0,46	-3,46
0,75	-0,62	2,38	-0,41	-3,41
1	-0,56	2,44	-0,38	-3,38
5	-0,39	2,61	-0,25	-3,25
10	-0,39	2,61	-0,23	-3,23
20	-0,43	2,57	-0,24	-3,24
30	-0,50	2,5	-0,25	-3,25
40	-0,48	2,52	-0,24	-3,24
50	-0,57	2,43	-0,27	-3,27
60	-0,48	2,52	-0,24	-3,24
70	-0,56	2,44	-0,26	-3,26
80	-0,61	2,39	-0,27	-3,27
90	-0,53	2,47	-0,26	-3,26
100	-0,63	2,37	-0,29	-3,29
110	-0,56	2,44	-0.31	-3,31

Table 2 – CM-, DM voltage correction factors

3 Ordering Information

Part Number	Description
TBLM2	LISN Mate; 1 piece BNC termination; 2 pieces BNC-male to BNC male cables, 35cm, RG223; individual test protocol

Table 2 – Ordering Information

4 History

Version	Date	Author	Changes
V1.0	17.6.2024	Mayerhofer	Creation of the document
V1.1	2.1.2025	Mayerhofer	Corrected chapter 2.2
V1.2	2.3.2025	Mayerhofer	Corrected picture 3 label
V1.3	28.1.2026	Mayerhofer	Chapter 2.3 added

Table 3 – History